Phoenix Controls Neutralizer™ is a sound cancellation device designed to be used solely with the Phoenix Controls Accel® II family of valves. The Neutralizer consists of resonator chambers that are tuned to the output frequencies of the valve, providing a reduction in sound power levels over the entire sound spectrum. In many environments, the Accel II valve alone will provide for acceptable sound levels. The Neutralizer is an add-on device to further help meet ASHRAE noise guidelines and eliminate the need for silencers. It is designed for clean airflow applications. See the Appendix section of the *Phoenix Controls Engineering Guide* for sound data.

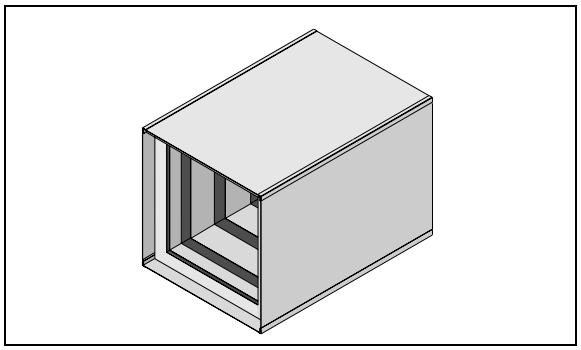

Neutralizer.

FEATURES

Phoenix Controls Neutralizer offers the following features:

- Modifies the sound spectrum of the Accel II valve
- Low pressure drop requirements
- Compact design
- No porous surfaces
- Continuous sealed seam

APPLICATION*

Phoenix Controls Accel II valves are designed to reduce sound over all frequencies, but significantly target the lower bands (125, 250, 500 Hz) that are most problematic for airflow terminal devices. Where most devices require silencers to meet specified sound levels, the Accel II valves alone often meet those needs, whether they are measured by Room Criteria (RC), Noise Criteria (NC), or A-weighted.

Occasionally, the valve's higher frequency bands need to be reduced. The Neutralizer dramatically reduces the sound power levels at higher bands (1000, 2000, 4000 Hz).

- **Supply applications:** High-frequency attenuation from branching and fittings (elbows, tees, flex duct, etc.), together with the Accel II valves, will generally eliminate the need for silencers. However, the use of a Neutralizer may further help reduce noise.
- **Exhaust applications:**
  –Fume hoods: Attenuation characteristics of the hood itself significantly neutralize high-frequency sounds. Galvanized Neutralizers are not designed for this environment.
  –General exhaust: Branching and duct fittings tend to be minimized as compared to supply systems, but this is often negated by the exhaust valve's inherent lower medium and high frequencies. If further sound reductions are needed, the Neutralizer can be used to help eliminate the need for silencers.

*A sound analysis should be completed prior to specifying any sound reduction strategy.

SPECIFICATIONS

- 24 ga. galvanized steel
- Each size Neutralizer can be used with any size Phoenix Controls Accel II valve.
- Pressure drop across device is less than 0.3" wc (75 Pa) for most flows. See the charts on page 3.
- For sound power levels (dB), see the Appendix section of *Phoenix Controls Engineering Guide*

ORDERING GUIDE

NEUA _ _

BASE NUMBER
Galvanized steel Neutralizer with sealed interfaces

NUMBER OF UNITS
1 = One for single valve body
2 = Two for dual valve bodies
3 = Three for triple valve bodies
4 = Four for quad valve bodies

UNIT SIZE
08 = 8" unit (7.75"/197 mm actual)
10 = 10" unit (9.75"/248 mm actual)
12 = 12" unit (11.75"/298 mm actual)

TABLE OF CONTENTS

Dimensions & Weights.....2
Installation 2
Maintenance.....2
Pressure Drop Data.....3

75 Discovery Way • Acton, Massachusetts 01720 • Telephone (978) 795-1285 • Fax (978) 795-1111

©1998 Phoenix Controls Corporation. Specifications subject to change without notice. Rev. 1/04

DIMENSIONS

	A		B		C		Weight	
	inches	mm	inches	mm	inches	mm	lbs.	kg
8	7.75	197	7.75	197	14.25	362	10.7	4.7
10	9.75	248	9.75	248	14.25	362	11.7	5.1
12	11.75	298	11.75	298	14.25	362	13.4	5.8
2-10	9.75	248	19.50	496	14.25	362	23.4	10.2
2-12	11.75	298	23.50	596	14.25	362	26.8	11.7
3-12	11.75	298	35.25	895	14.25	362	40.2	17.5
4-12	11.75	298	47.00	1192	14.25	362	53.6	23.3

NOTE:
1. Dimensions given are accurate to ±0.13" (3 mm).
2. Weights given are approximate and are listed for reference only.

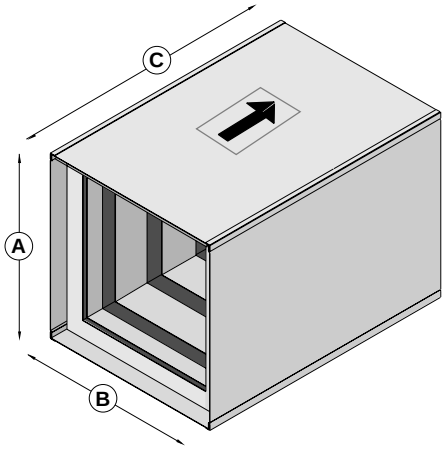

INSTALLATION

Procedure for Physical Installation of Neutralizer

IMPORTANT: The Neutralizer is direction-specific. Be certain the unit is installed with the arrow pointing in the direction of airflow.

1. Neutralizers are shipped without location tags.
2. The Neutralizer is designed to slip into the duct and be fastened with standard sheet metal screws. Seal any gaps with duct sealant. Note the weight of each unit and support ductwork appropriately.

IMPORTANT: The resonator chambers must not be penetrated by sheet metal screws. Fasten units to ductwork at the entrance and exit flanges only.

3. Multiple units consist of a series of single units fastened together. Neutralizers are not tagged for specific locations.
4. Multiple units should be assembled side-by-side with sheet metal screws and duct sealant. Verify that all units have the direction arrow pointing in the direction of airflow. Then install the assembly into the duct as described in step 2.
5. The Neutralizer must be installed on the room side of the valve (between the valve and the register, grille or diffuser).
6. The units may be installed directly at the valve or they may be separated (see diagrams at right). Transitions, screws, duct sealant and hanger stock are not provided by Phoenix Controls.

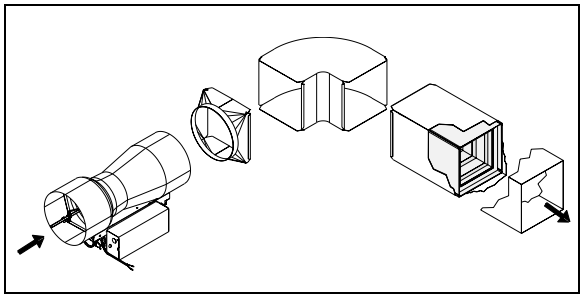

Single valve with Neutralizer separated (supply valve shown).

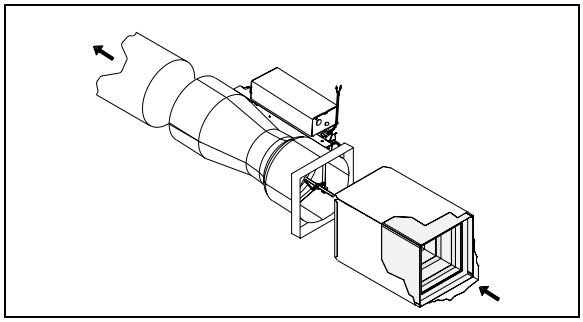

Single valve with Neutralizer connected (exhaust valve shown).

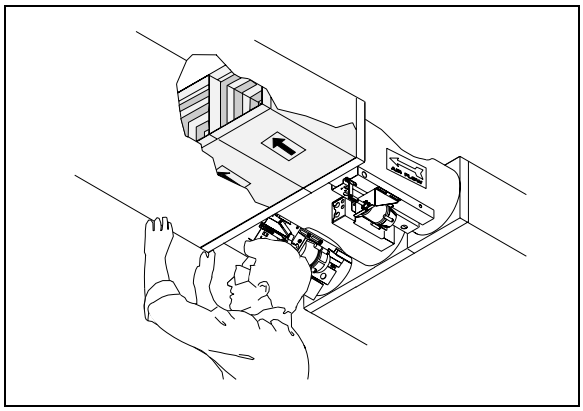

Multiple valves with Neutralizers connected.

MAINTENANCE

The Neutralizer has no moving parts and requires no ongoing preventative maintenance.

©1998 Phoenix Controls Corporation. Specifications subject to change without notice. Rev. 1/04

PRESSURE DROP DATA

Any size Neutralizer can be used with any size valve. Therefore, a larger Neutralizer can be used to reduce the pressure drop without decreasing accoustic performance.

Graph 1. Single Neutralizer Static Pressure Drop Data

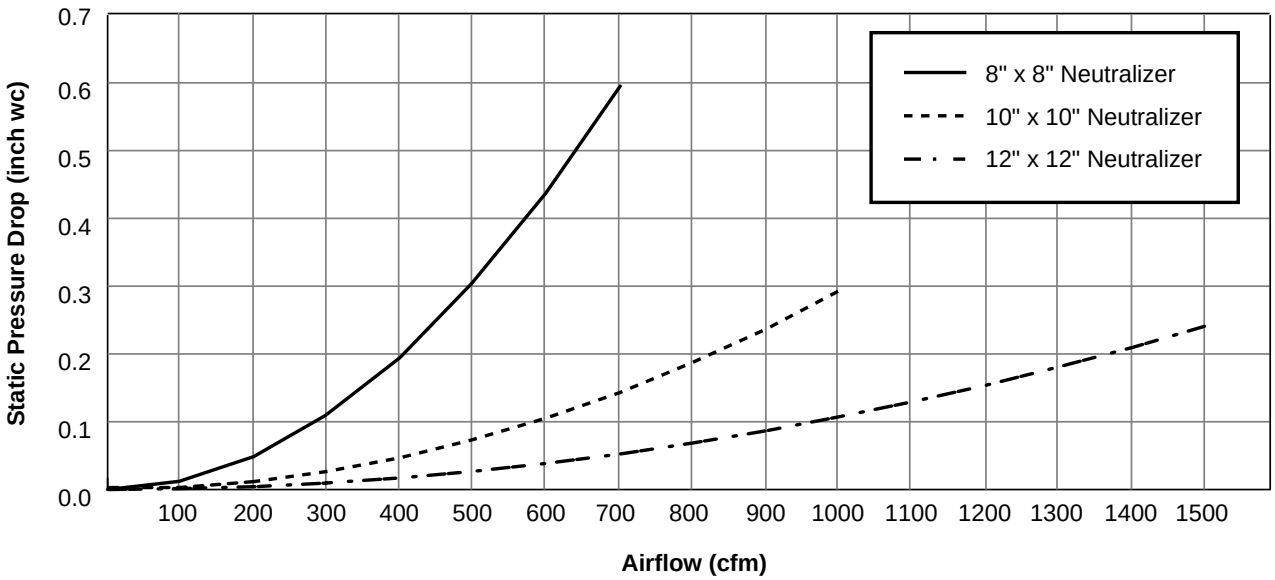
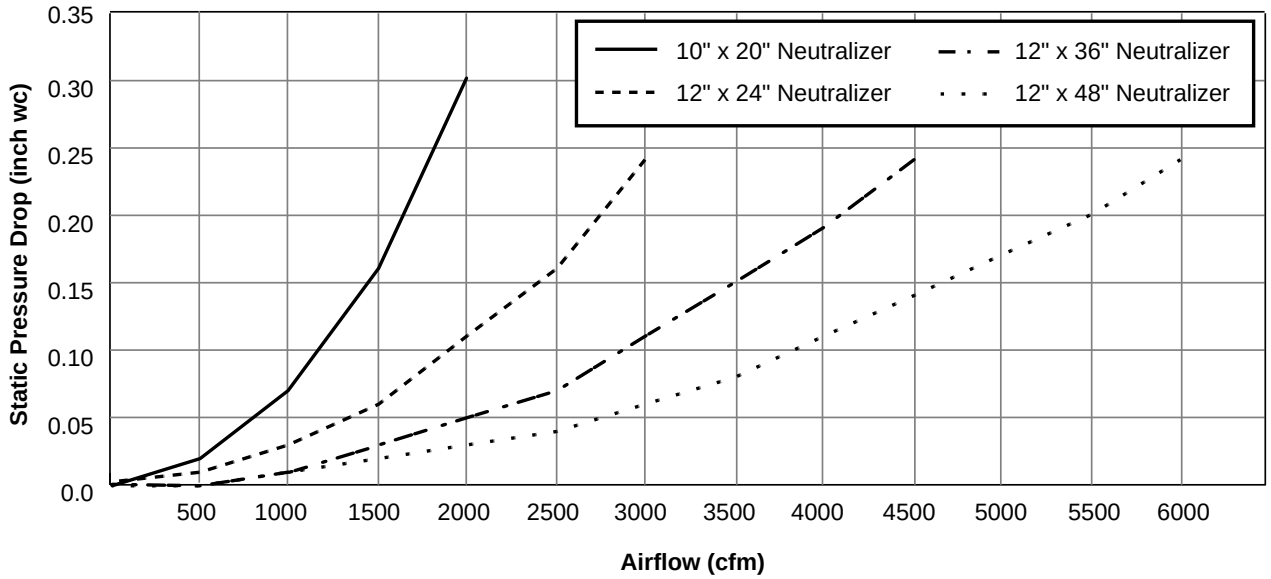
Graph 2. Multiple Neutralizer Static Pressure Drop Data